# Beyond the RTOS

## Modern Embedded Software Architecture

Miro Samek, Ph.D.
Quantum Leaps, LLC

# Presentation Outline

- A quick introduction to RTOS and the perils of blocking
- Active objects
- State machines
- Active object frameworks for deeply embedded systems

~40 min

- Demonstrations ~10 min
- Q&A ~10 min

# In the beginning was the “Superloop”

```
// adapted from the Arduino Blink Tutorial (*)
void main() {
    pinMode(LED_PIN, OUTPUT); // setup: set the LED pin as output
    while (1) {  // endless loop
        digitalWrite(LED_PIN, HIGH); // turn LED on
        delay(1000); // wait for 1000ms
        digitalWrite(LED_PIN, LOW); // turn LED off
        delay(1000); // wait for 1000ms
    }
}
```

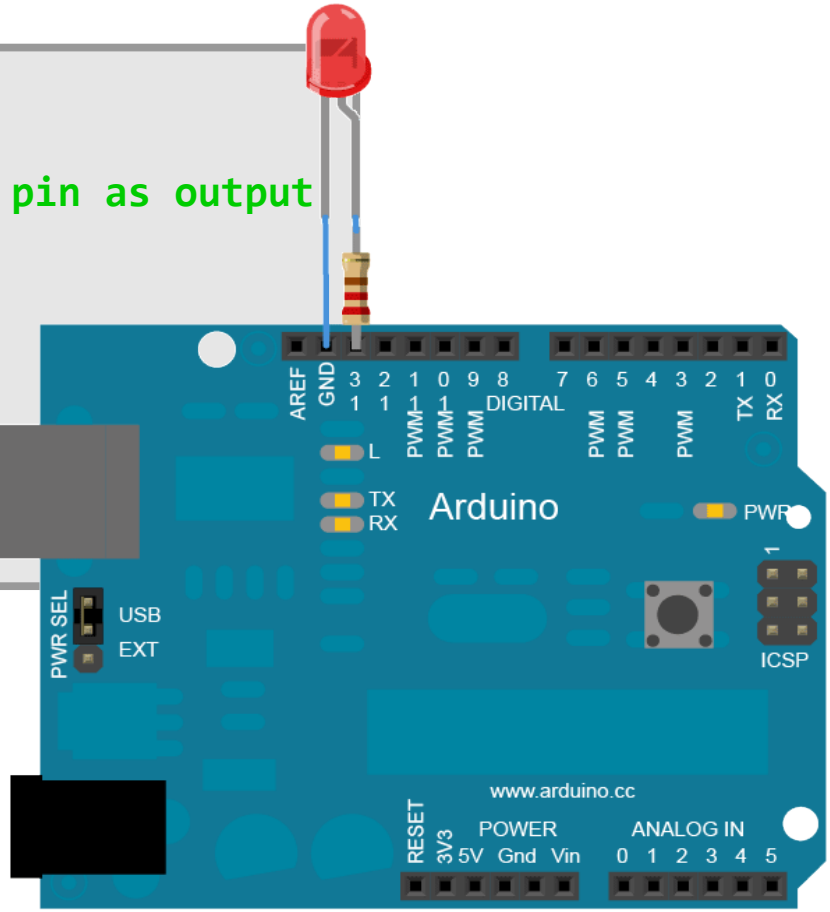


(*) Arduino Blink Tutorial: http://www.arduino.cc/en/Tutorial/Blink

# RTOS Multithreading: Multiple "Superloops"

```
void thread_alarm() {          // RTOS thread routine
    pinMode(SW_PIN, INPUT);    // setup: set the Switch pin as input
    while (1) {                // endless loop
        if (digitalRead(SW_PIN) == HIGH) { // is the switch depressed?
           digitalWrite(ALARM_PIN, HIGH); // start the alarm
        }
        else {
           digitalWrite(ALARM_PIN, LOW);  // stop the alarm
        }
        RTOS_delay(100);
    }
}
```

```
void thread_blink() {          // RTOS thread routine
    pinMode(LED_PIN, OUTPUT); // setup: set pin as output
    while (1) {                // endless loop
        digitalWrite(LED_PIN, HIGH); // turn the LED on
        RTOS_delay(1000);      // wait for 1000ms
        digitalWrite(LED_PIN, LOW);  // turn the LED off
        RTOS_delay(1000);      // wait for 1000ms
    }
}
```

# Thread Context & Context Switch

```
void thread_blink() {
    pinMode(LED_PIN, OUTP
    While (1) { // endles
        digitalWrite(LED_
 pc ► RTOS_delay(1000);
        digitalWrite(LED_
 pc ► RTOS_delay(1000);
    }
}
```

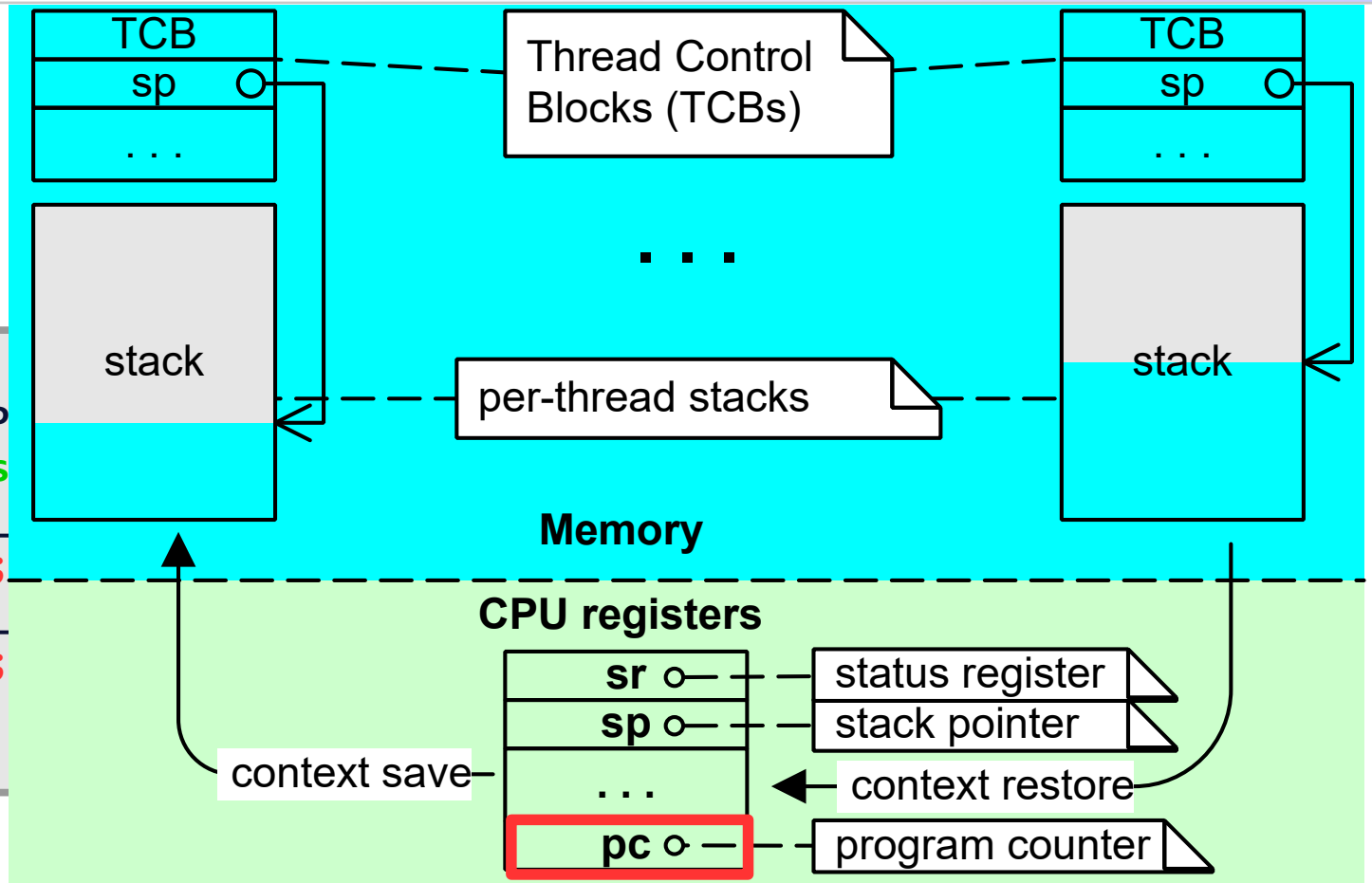

# Thread Blocking

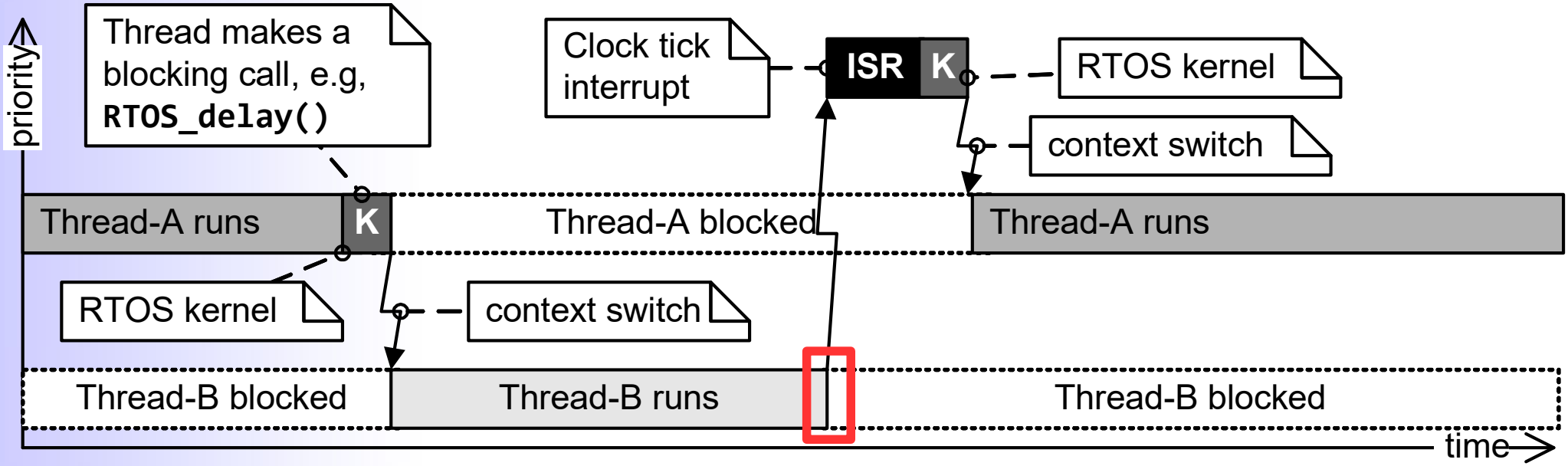

# RTOS Benefits

1) Divide and conquer strategy

   → Multiple threads are easier to develop than one “kitchen sink” superloop

2) More efficient CPU use

   → Threads that are efficiently blocked don't consume CPU cycles

3) Threads can be decoupled in the time domain

   → Under a preemptive, priority-based scheduler, changes in low-priority threads have no impact on the timing of high-priority threads (Rate Monotonic Analysis (RMA))

# Perils of Blocking

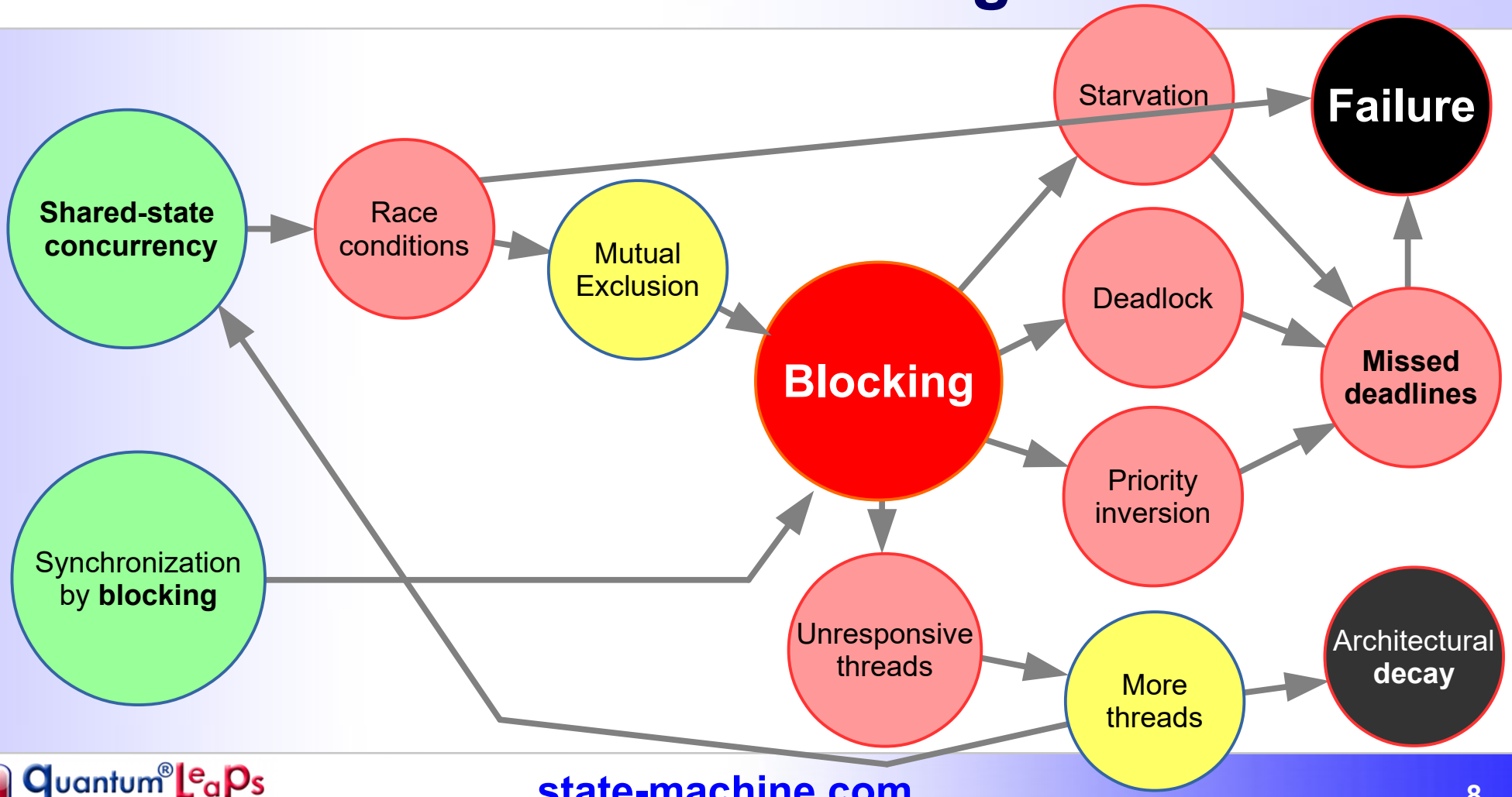

# Best Practices of Concurrent Programming(*)

- **Don't block** inside your code
  - → Communicate and synchronize threads **asynchronously** via **event objects**
- **Don't share** data or resources among threads
  - → Keep data isolated and bound to threads (strict **encapsulation**)
- Structure your threads as “message pumps”

(*) Herb Sutter “Prefer Using Active Objects Instead of Naked Threads”

# Best Practices: RTOS Implementation

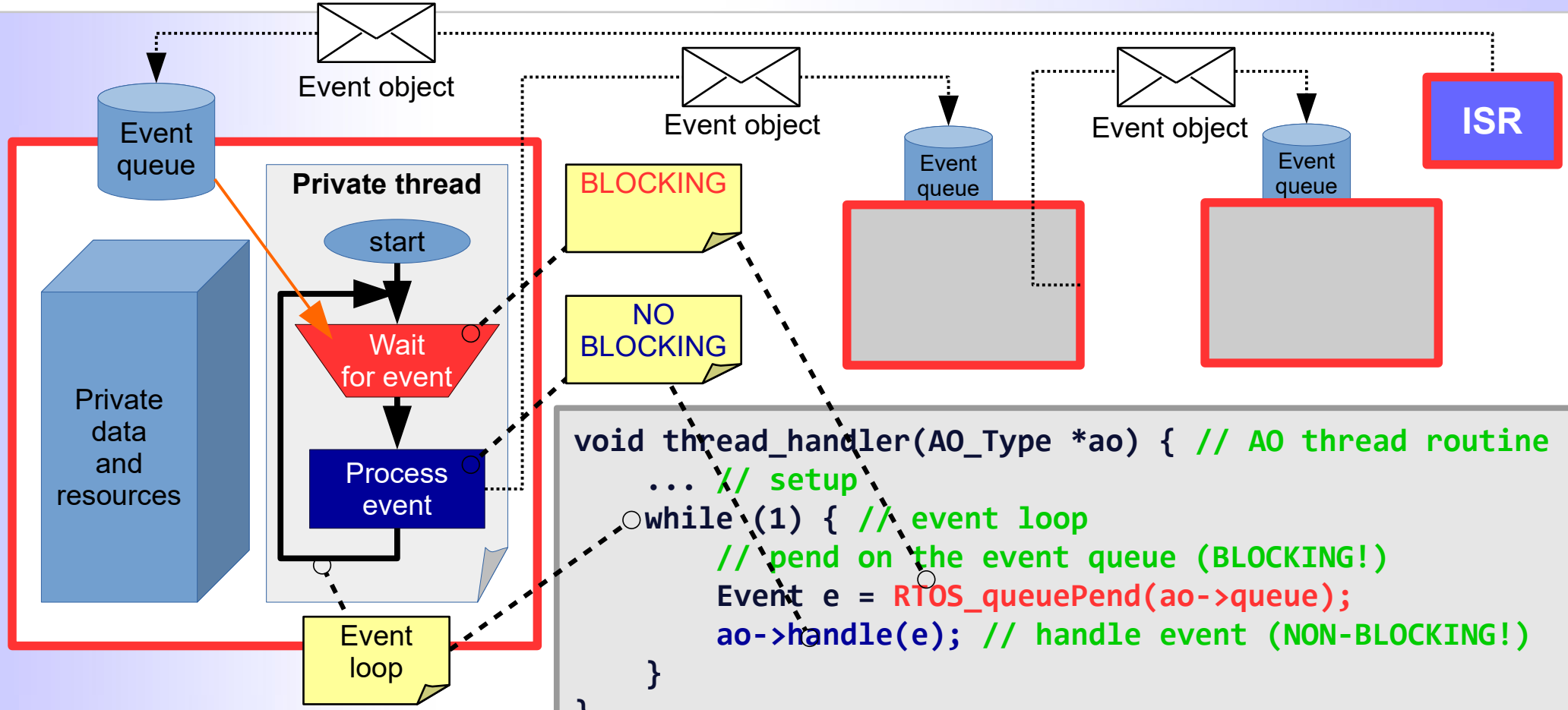


```
void thread_handler(AO_Type *ao) { // AO thread routine
    ... // setup
    while (1) { // event loop
        // pend on the event queue (BLOCKING!)
        Event e = RTOS_queuePend(ao->queue);
        ao->handle(e); // handle event (NON-BLOCKING!)
    }
}
```

# Active Object (Actor) Design Pattern

- **Active Objects (Actors)** are event-driven, strictly **encapsulated** software objects running in their **own threads** and communicating **asynchronously** by means of **events**.
- Not a novelty. Carl Hewitt's actors 1970s. ROOM actors 1990s.
- Adapted from ROOM into UML as **active objects**

  → ROOM actors and UML active objects use **hierarchical state machines** (UML statecharts) to specify the *behavior* of event-driven active objects.

# Active Object Framework

- Implement the Active Object pattern as a **framework**

```
void thread_handler(AO_Type *ao) { // AO thread routine
    ... // setup
    while (1) { // event loop
        // pend on the event queue (BLOCKING!)
        Event e = RTOS_queuePend(ao->queue);
        ao->handle(e); // handle event (NON-BLOCKING!)
    }
}
```

- **Inversion of control** (main difference from RTOS)
  - → *automates* and *enforces* the best practices (**safer** design)
  - → brings **conceptual integrity** and consistency to the applications

# Paradigm Shift: Sequential → Event-Driven

- No blocking
  - → No use for most RTOS mechanisms!

```
void thread_blink() {
    pinMode(LED_PIN, OUTPUT);
    while (1) {
        digitalWrite(LED_PIN, HIGH
        RTOS_delay(1000); // NOT al
        ...
    }
}
```

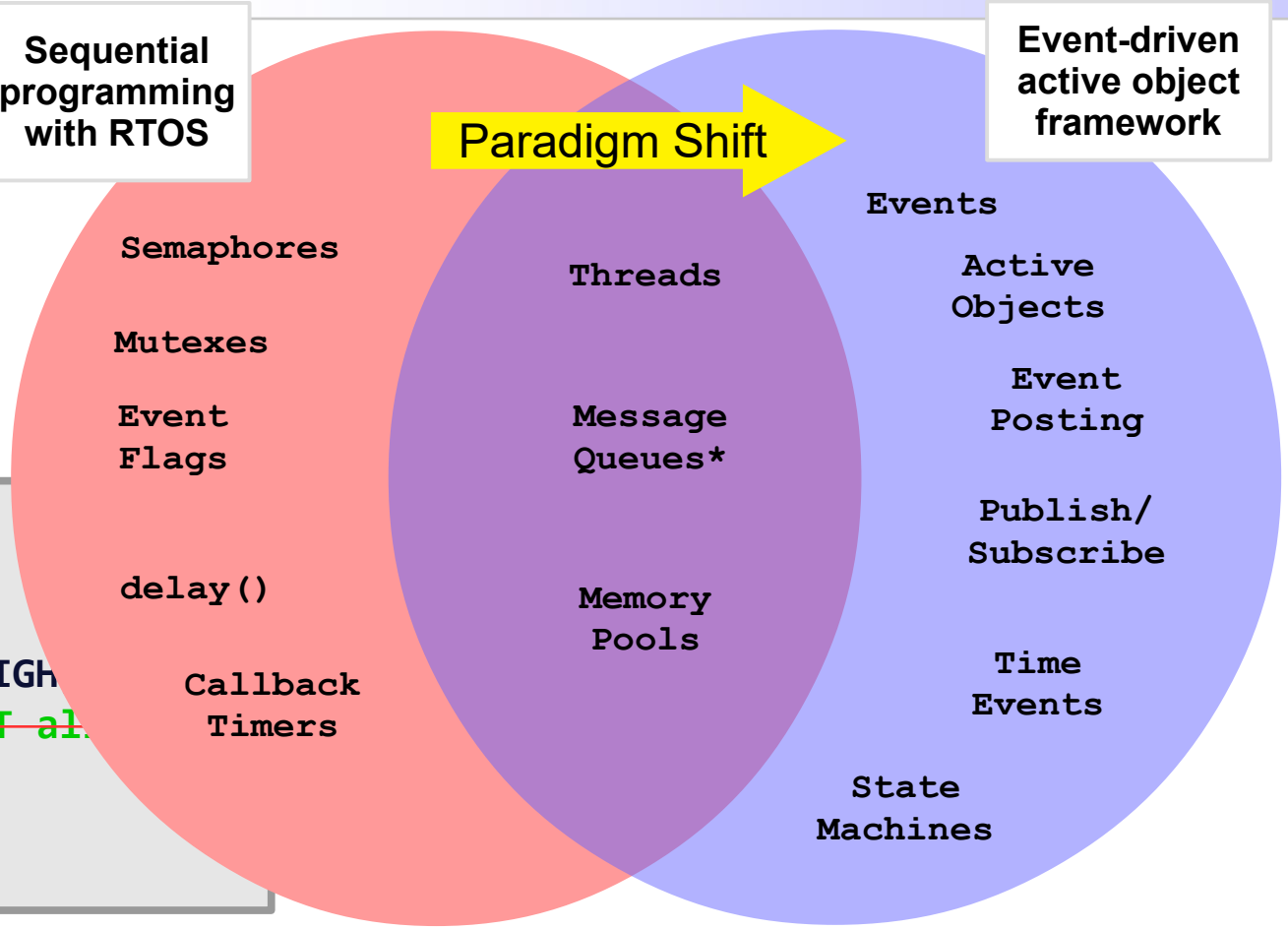

# Reduce “Spaghetti Code” with State Machines

- Finite State Machines—the best known “spaghetti reducers”
  - → “State” captures only the relevant aspects of the system's **history**
  - → Natural fit for event-driven programming, where the code cannot block and must *return* to the event-loop after each event
  - → Minimal context (a single **state-variable**) instead of the whole call stack

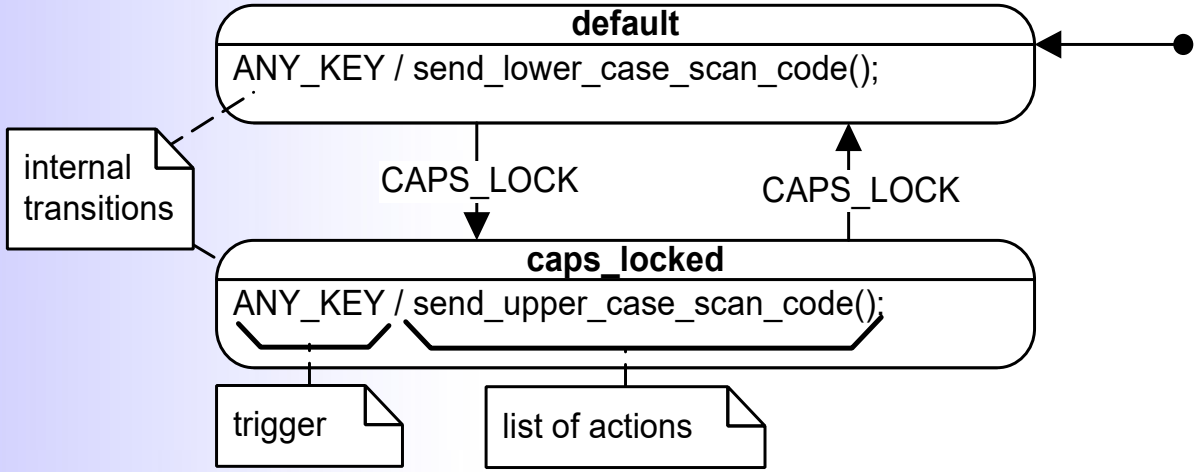


# State Machines are <u>not</u> Flowcharts

**Statechart (event-driven)**
→ represents all states of a system
→ driven by explicit **events**
→ processing happens on arcs (transitions)
→ no notion of "progression"

**Flowchart (sequential)**
→ represents stages of processing in a system
→ gets from node to node upon completion
→ processing happens in nodes
→ progresses from start to finish

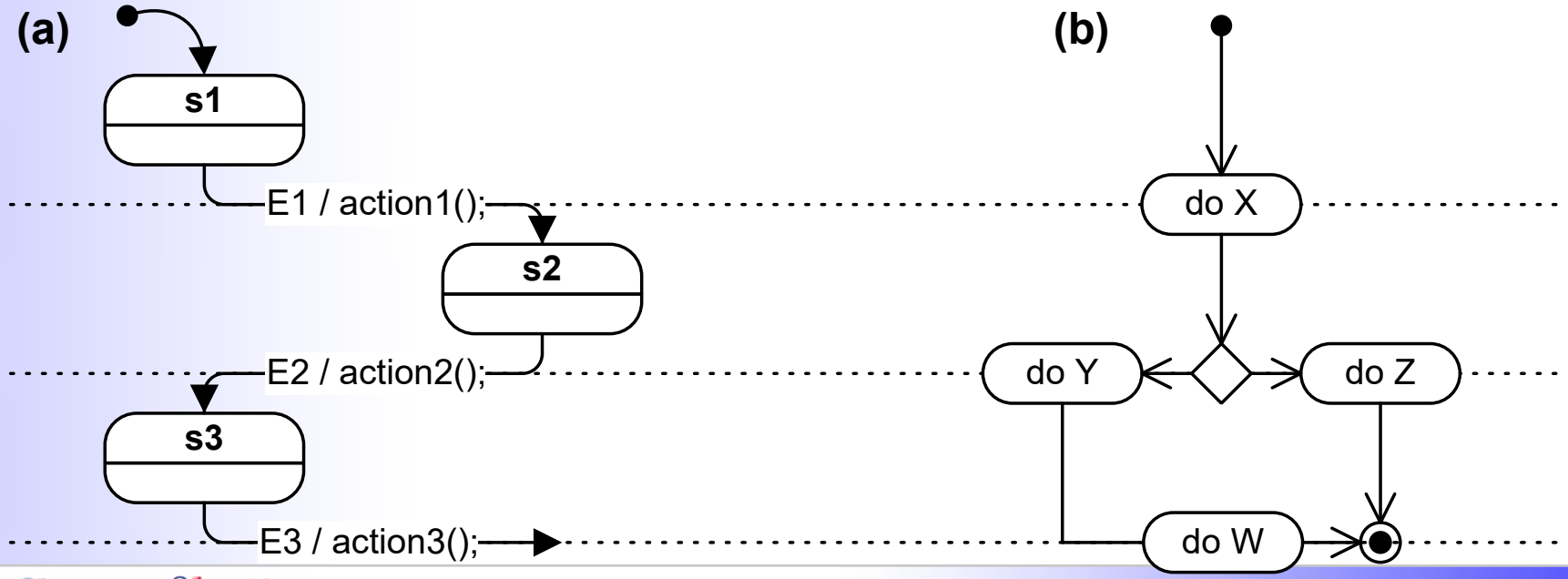

# Event-Driven vs Input-Driven State Machines

**Input-driven state machines** are NOT driven by events:

→ combination of **polling** for events and state machine logic

→ often called from "superloops" (`while(1)` loops)

→ transitions have only **guard conditions**

( `if(guard)` statements in the code)

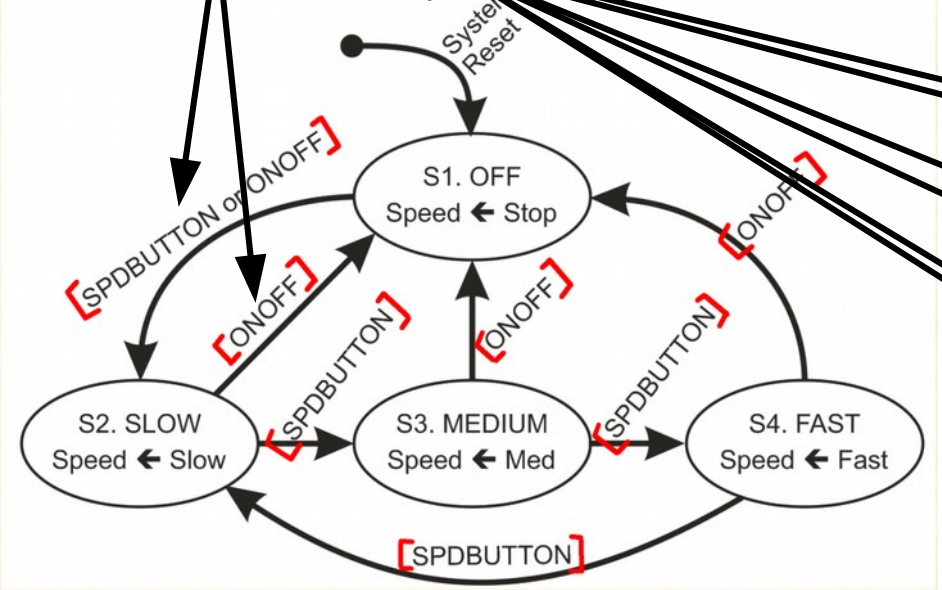


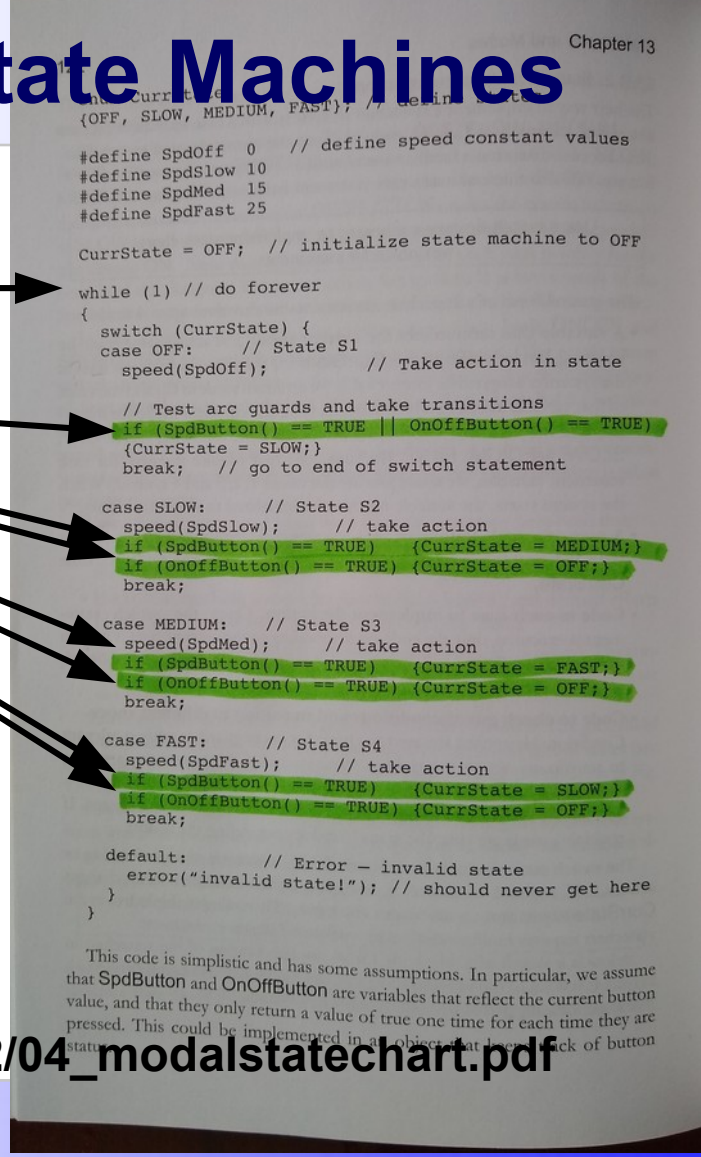

Chapter 13

```
{OFF, SLOW, MEDIUM, FAST}; // define state

#define SpdOff   0    // define speed constant values
#define SpdSlow  10
#define SpdMed   15
#define SpdFast  25

CurrState = OFF;  // initialize state machine to OFF

while (1) // do forever
{
  switch (CurrState) {
  case OFF:      // State S1
    speed(SpdOff);          // Take action in state

    // Test arc guards and take transitions
    if (SpdButton() == TRUE || OnOffButton() == TRUE)
    {CurrState = SLOW;}
    break;   // go to end of switch statement

  case SLOW:      // State S2
    speed(SpdSlow);      // take action
    if (SpdButton() == TRUE)    {CurrState = MEDIUM;}
    if (OnOffButton() == TRUE) {CurrState = OFF;}
    break;

  case MEDIUM:    // State S3
    speed(SpdMed);      // take action
    if (SpdButton() == TRUE)    {CurrState = FAST;}
    if (OnOffButton() == TRUE) {CurrState = OFF;}
    break;

  case FAST:      // State S4
    speed(SpdFast);      // take action
    if (SpdButton() == TRUE)    {CurrState = SLOW;}
    if (OnOffButton() == TRUE) {CurrState = OFF;}
    break;

  default:        // Error – invalid state
    error("invalid state!"); // should never get here
  }
}
```

This code is simplistic and has some assumptions. In particular, we assume that SpdButton and OnOffButton are variables that reflect the current button value, and that they only return a value of true one time for each time they are pressed. This could be implemented in an object that keeps track of button

**Source: http://users.ece.cmu.edu/~koopman/lectures/ece642/04_modalstatechart.pdf**

# Hierarchical State Machines

Traditional FSMs "explode" due to **repetitions**

State hierarchy eliminates repetitions → programming-by-difference

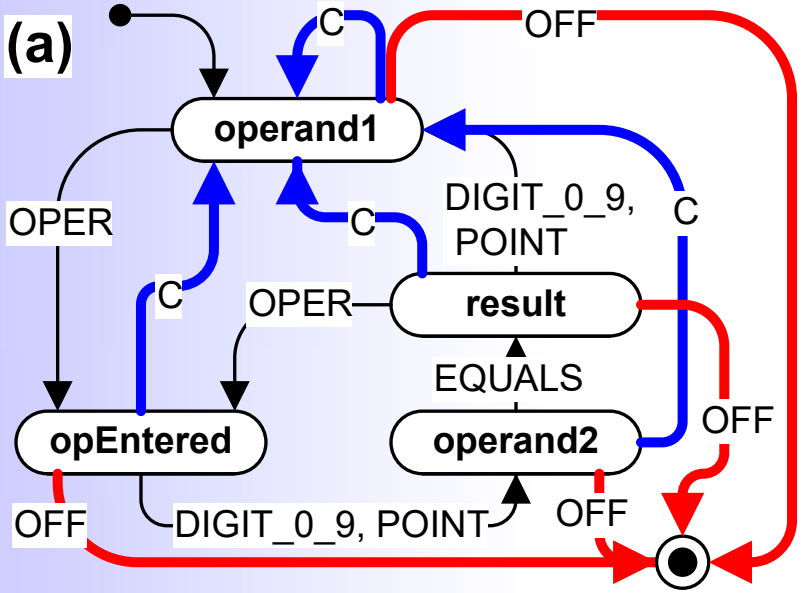


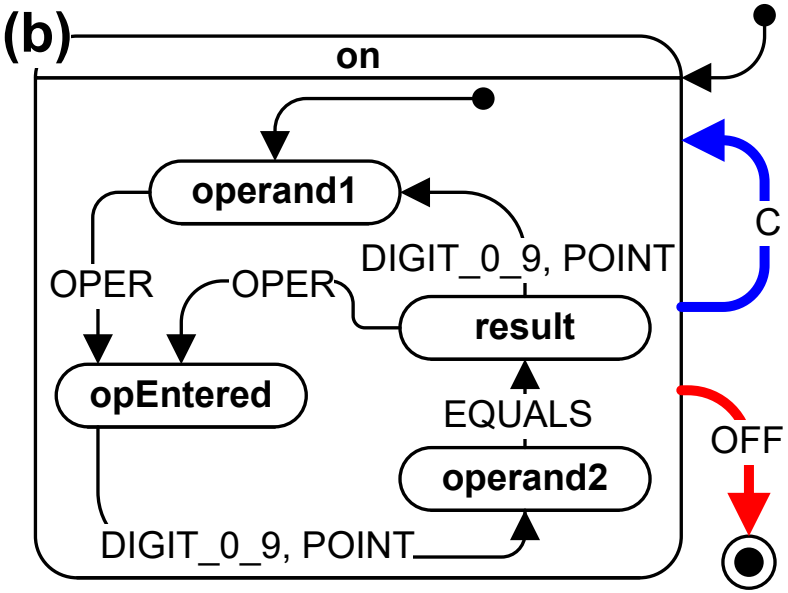


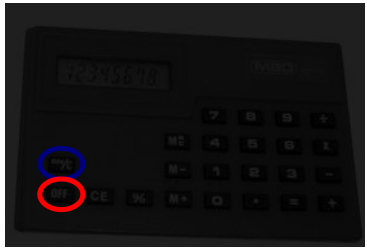

# AO Frameworks for Deeply Embedded Systems

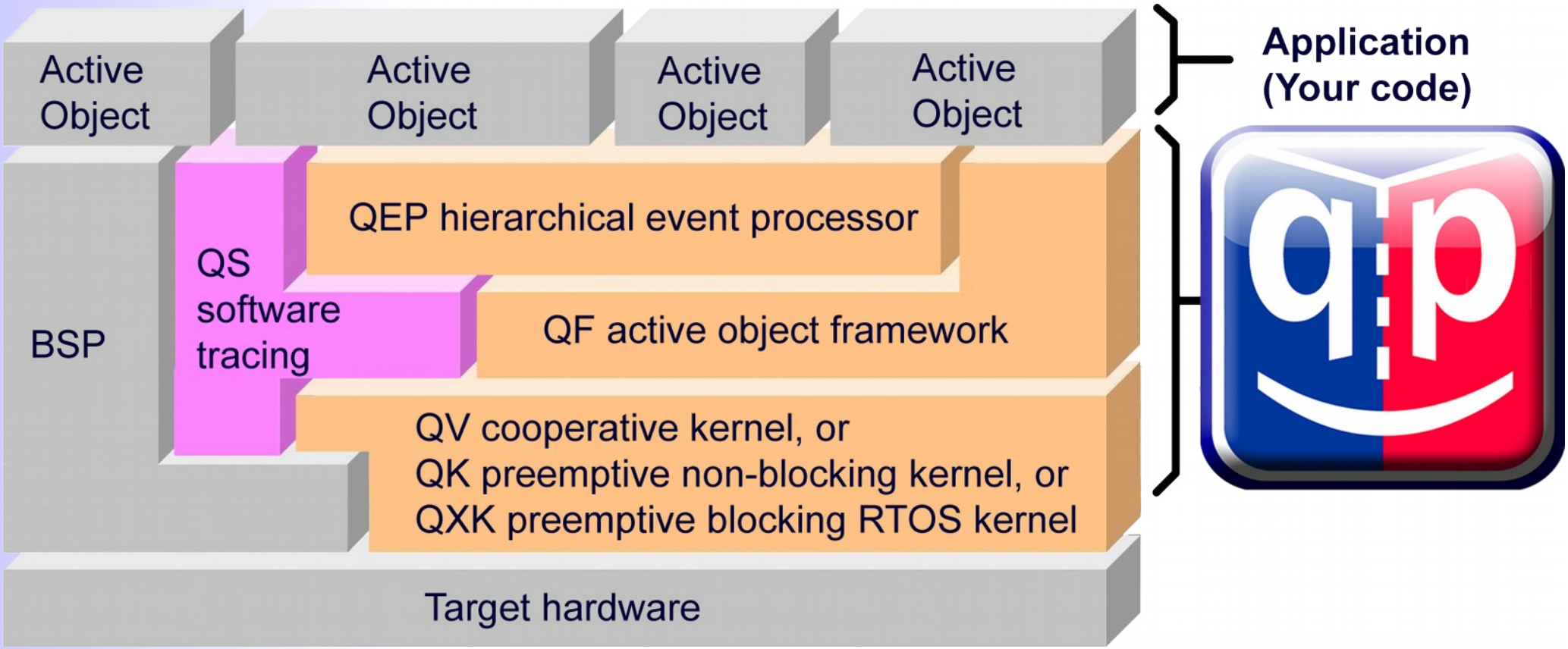

# AO Frameworks vs. RTOS kernels

AO Frameworks can be **smaller** than RTOS kernels, because they don't need blocking

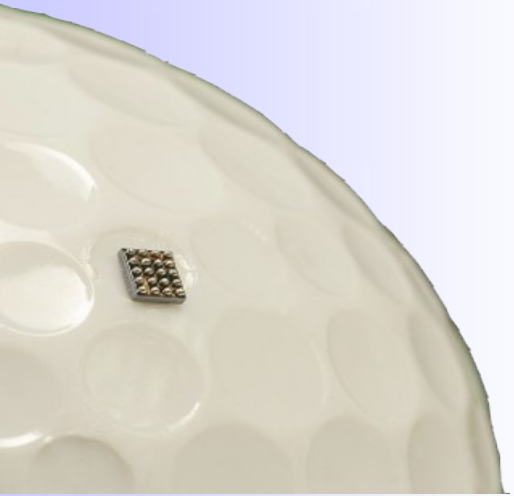

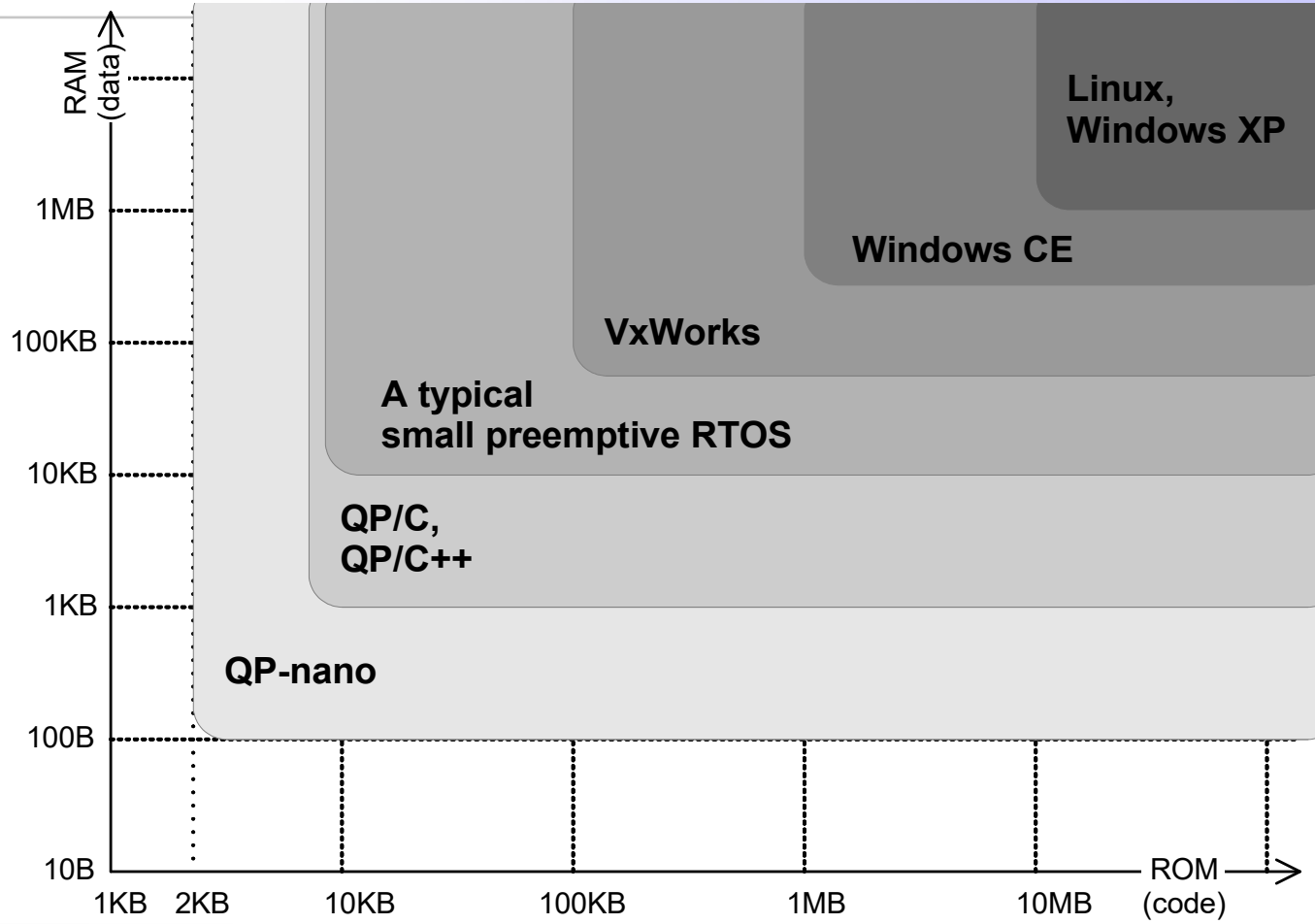

# AO Framework – “Software Bus”

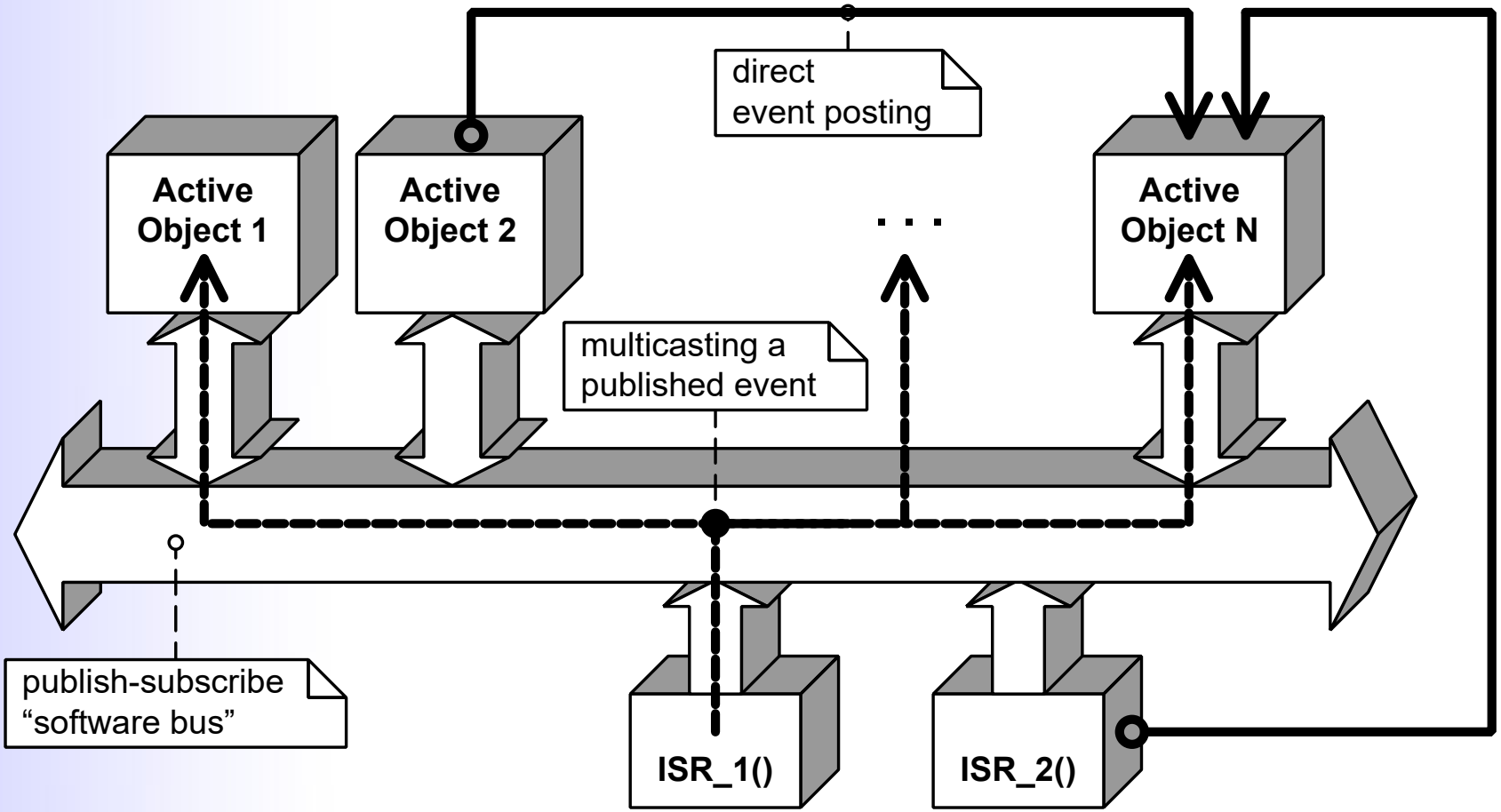

# Coding Hierarchical State Machines

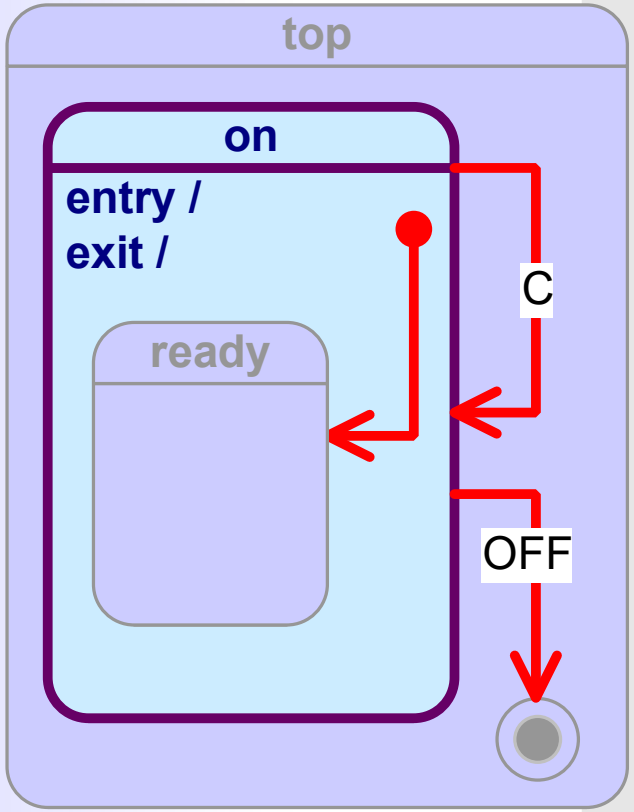


```
QState Calc_on(Calc * const me, QEvt const *e) {
    QState status;
    switch (e->sig) {
        case Q_ENTRY_SIG:   /* entry action */
            . . .
            status = Q_HANDLED();
            break;
        case Q_EXIT_SIG:     /* exit action */
            . . .
            status = Q_HANDLED();
            break;
        case Q_INIT_SIG:     /* initial transition */
            status = Q_TRAN(&Calc_ready);
            break;
        case C_SIG:          /* state transition */
            BSP_clear();     /* clear the display */
            status = Q_TRAN(&Calc_on);
            break;
        case OFF_SIG:        /* state transition */
            status = Q_TRAN(&Calc_final);
            break;
        default:
            status = Q_SUPER(&QHsm_top);  /* superstate */
            break;
    }
    return status;
}
```

# Cooperative Kernel (QV)

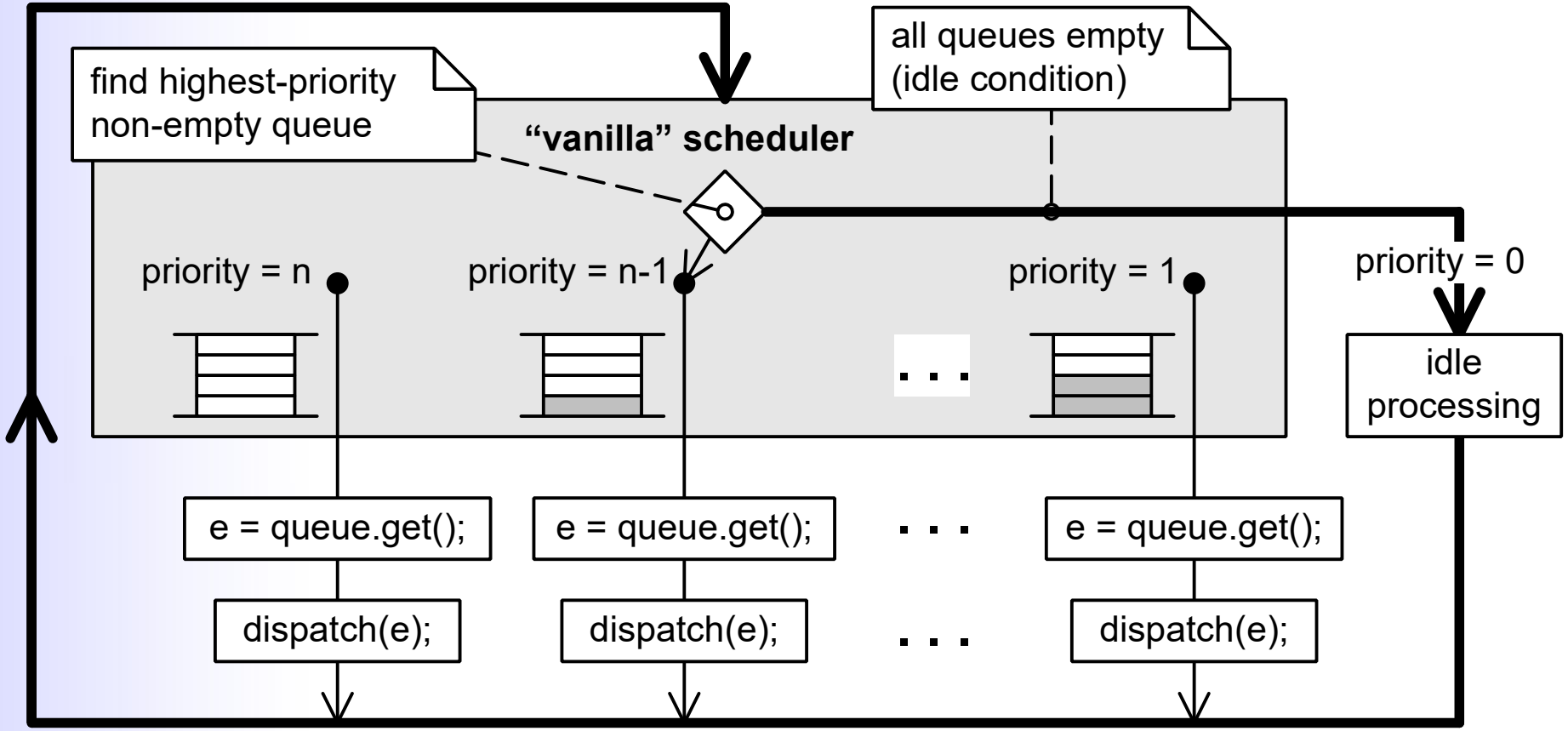

# Preemptive, Non-Blocking Kernel (QK)

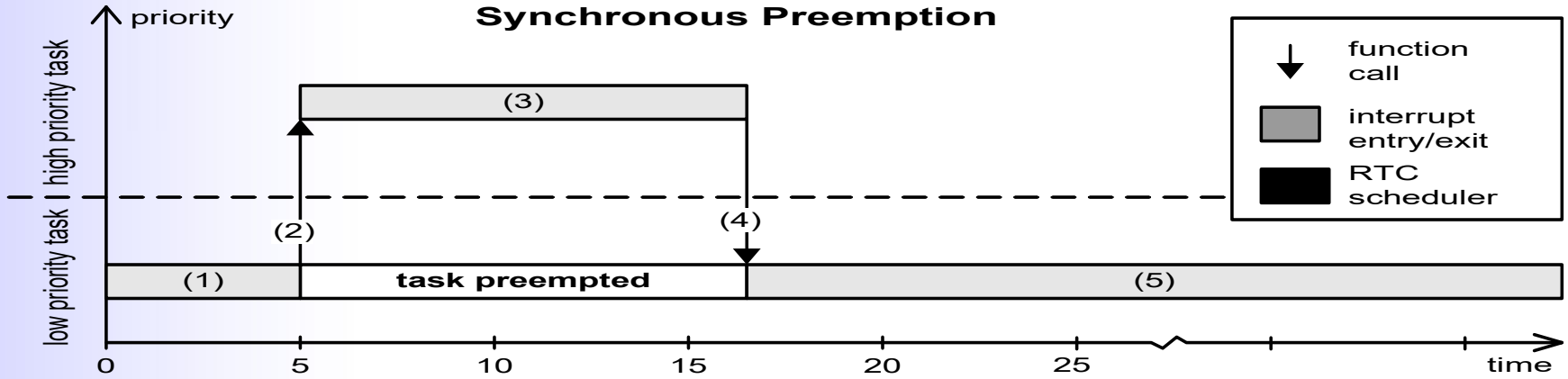


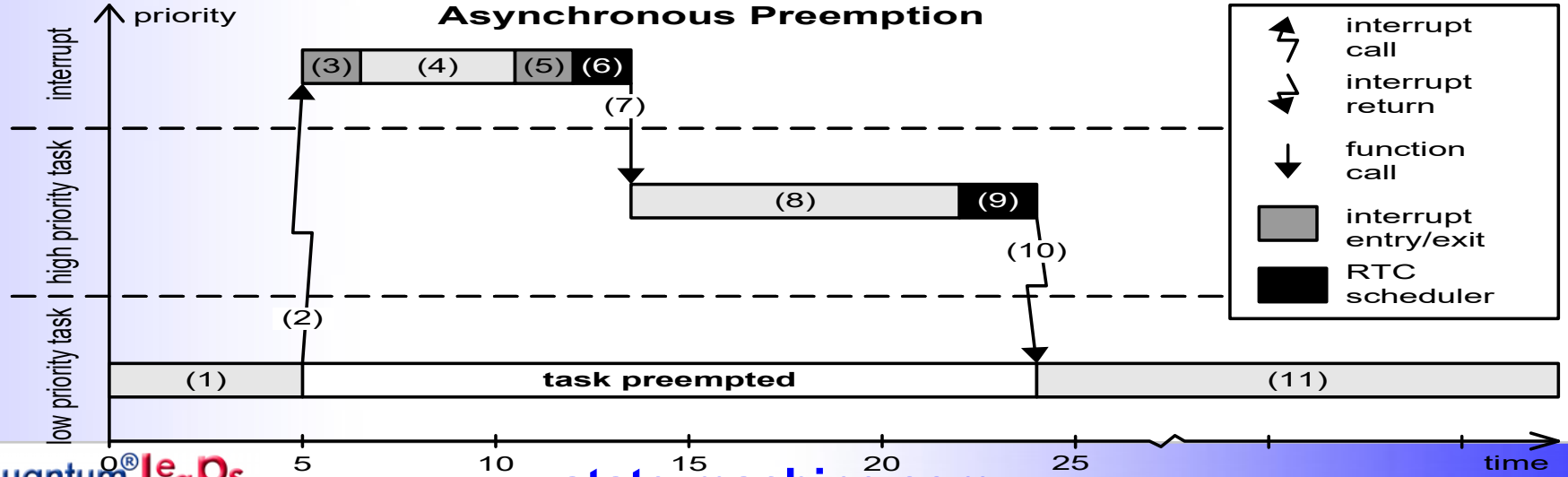

# Graphical Modeling and Code Generation

- Active Objects enable you to effectively apply UML modeling
- A modeling tool needs an AO framework as a target for automatic code generation

# Summary

- Experts use the Active Object design pattern instead of naked RTOS
- AO framework is an ideal fit for deeply embedded real-time systems
- AO framework requires a paradigm shift (sequential→event-driven)
- Compared to RTOS, AO framework opens new possibilities:
  - → Safer architecture and state-machine design method (functional safety)
  - → Simpler, more efficient kernels (lower-power applications)
  - → Easier unit testing and software tracing (V&V)
  - → Higher level of abstraction suitable for modeling and code generation
- **Welcome to the 21st century!**